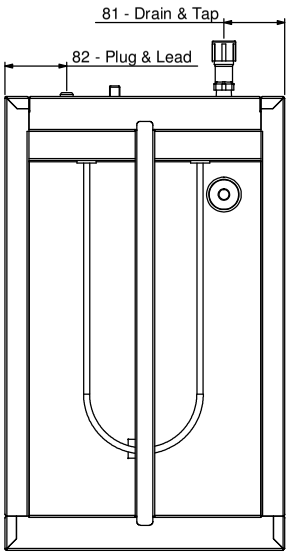

Product Details

Electrical Connection	: 10 Amp Plug & Lead (supplied)
Electrical Rating	: 240v, 2.5amps, 600w,
	: 1 element @ 600w
Waste	: 13mm with 19mm drain and 1/2" BSP mini cistern cock
Unit Controls	: Thermostat with dial thermometer

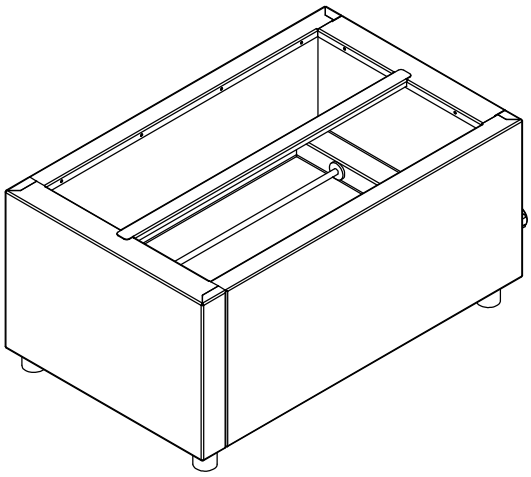

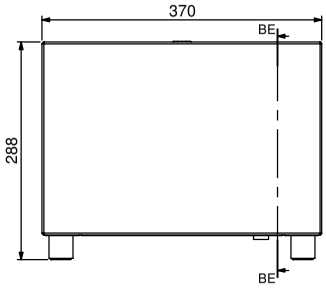

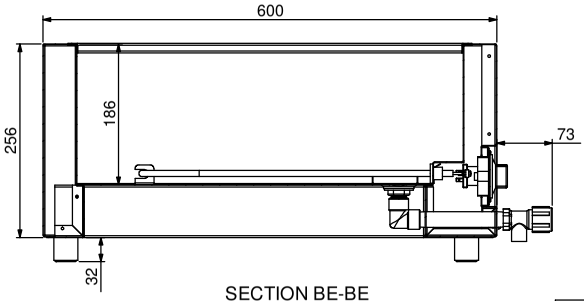

SECTION BE-BE

Press:	Programmed by:	Date:	Punch:	Die:

STODDART
METAL FABRICATORS
TOM STODDART Pty Ltd ACN 009 690 251
215 Jackson Rd Sunnybank Hills Qld 4109
PO Box 420 Sunnybank Qld 4109
Phone (617) 3345 5011 Fax (617) 3344 1000
Email sunnybank@stoddart.com.au
Quality in stainless steel

	NAME	SIGNATURE	DATE
DRAWN	N Wooler		3/08/2004
APP'V'D			

PRODUCT: Woodson 1/1 Bain Marie

UNLESS OTHERWISE SPECIFIED: DIMENSIONS ARE IN MILLIMETERS

MATERIAL:
THICKNESS:
FINISH:

DO NOT SCALE DRAWING

This drawing remains the property of Tom Stoddart Pty Ltd & cannot be reproduced without prior permission.

PART No: **WBMS11-A001**
DESCRIPTION: Assembly
DWG No: WBMS11-D001
REVISION: A
A3
Sheet 1 of 18

F:\10_Engineering\Stoddart Standard Products\Woodson\WBMS11 1 Bay Bain Marie\01_Solidworks\